Shade Structure at Gilley Pool

April 6, 2017

Dear Interested Bidder:

The City of McMinnville will receive sealed bids on purchase and installation of TWO (2) shade structures at the Gilley Pool at 500 Garfield St., McMinnville TN 37110 per specifications enclosed. Sealed bids will be received no later than 2:00 p.m., local time, April 19, 2017 in the office of the City Recorder, McMinnville City Hall, 101 East Main Street, P.O. Box 7088, McMinnville, Tennessee, 37111, and then at said office publicly opened and read aloud. Bids will be awarded based on the lowest and/or best bid. The City reserves the right to reject any and/or all bids.

Bidders are requested to read the complete specification invitation carefully and submit their bid in strict accordance with the requirements set forth therein.

All work and materials shall be fully guaranteed by the bidder against factory and delivery defects. Any defect which may occur, as the result of either faulty material or workmanship within the period of the manufacturer's standard warranty, or defects encountered during deliver, shall be corrected without expense to the City of McMinnville.

By virtue of bidding, the bidders guarantee the price quoted in the bid will remain firm until delivery, including the time from when the bids are opened until a purchase order is issued, such time not to exceed thirty (30) days.

If there are any questions regarding the specifications, you may contact Scott McCord, Director, City of McMinnville Parks and Recreation Department, at (931) 473-1212.

Sincerely,

Scott McCord
Director Parks and Recreation

GENERAL SPECIFICATIONS

Each bidder must indicate his compliance with these specifications, by checking yes or no in each section of the specification. Checking "YES" to that section will mean full compliance; checking "NO" will mean an exception is being taken. All exceptions must be fully explained on a separate page titled "EXCEPTIONS", giving reference to the page where the exception is taken. Failure to comply with this requirement will result in bid proposal being rejected.

SECTION A. GENERAL SPECIFICAITONS YES:NO

A. 1 INTENT: The intent of these specifications is to provide sufficient information to permit prospective bidders to make proposals on installation of shade structures at the Gilley Pool at 500 Garfield St., McMinnville TN 37110. ____:____

These specifications are intended as minimum requirements. However, it is recognized that each manufacturer has special features that make their work and materials unique. Therefore, all bids will be considered, but every bidder must state, in detail, where their work and materials fails to meet these specifications. It is the intention of the City to make sure that quality of service and pricing are both equal standards in deciding on any bids. The equipment used shall conform to all industry safety standards. ____:____

A. 2 The manufacturer shall defend any and all suits and assume all liability for any claim against the purchaser for the user of any patented process, device, or articles forming any part of the work proposed. Each bidder shall supply proof of product liability and facility insurance equal to or exceeding $1,000,000.00. A copy must be submitted with the bid. ____:____

A. 3 Bidder shall compute pricing less Federal and State taxes. It is understood that any applicable taxes will be added to the proposed prices, unless the purchaser furnishes appropriate tax-exempt forms. Do not show tax, bid lump sum. ____:____

A. 4 The purchaser will not consider any proposals which require advance payments for any portion of the work prior to its completion and final acceptance. ____:____

A. 5 Bids shall be addressed and submitted in accordance with the "Call For Bid Cover Letter". The words Sealed Bid for Shade Structure at Gilley Pool RFB, the date, and bid opening time must be stated on the face of the bid envelope. ____:____

A. 6 It is bidders responsibility to see that their proposals arrive on time. Late proposals, telegram or telephone bids WILL NOT be considered. ____:____

A. 7 No exceptions will be allowed for any of the aforementioned instructions. Bids not submitted in accordance with these instructions will be rejected. ____:____

A. 8 Each bid shall be accompanied by detailed description of the work to be performed, materials used, and equipment submitted. It is the intent of these specifications to cover the furnishing and delivery of services as specified. ____:____

YES:NO

A. 9 No bid shall be considered unless the bidder can meet the special conditions stated herein. ____:____

A. 10 PRICES AND PAYMENTS:
All bid prices shall be F.O.B. destination on a delivered and accepted basis at the City of McMinnville, Parks and Recreation Department, 500 Garfield St., McMinnville, Tennessee 37110. ____:____

A. 11 BID EVALUATION:
The purchaser, Parks and Recreation Director, shall evaluate bids received. This evaluation will be based as a minimum on the following criteria:

1. Commitment for expedient delivery. ____:____

2. Commitment to the general conditions contained herein, including warranty. ____:____

3. Completeness of the proposal, i.e., the degree with which it responds to all requirements and requests for information contained herein. ____:____

4. Contractor's demonstrated capabilities and qualifications. ____:____

A. 12 EXCEPTIONS TO SPECIFICATIONS:
Exceptions shall be referenced to the paragraph and page of these specifications where the item appears, and drawings or photographs and technical information about the exception shall be included. Any exceptions may be considered during the evaluation process, and the decision shall be final.

Proposals taking total exception to specifications will not be accepted.

The purchaser reserves the right to accept or reject any or all bids on such basis as purchaser deems to be in its best interest. ____:____

A. 13 CONTRACT AWARD:
The purchaser reserves the right to reject any or all bids deemed to be unresponsive. The purchaser also reserves the right to waive any informalities, irregularities and technicalities in procedure. ____:____

The purchaser reserves the right, before awarding the contract, to require a bidder to summit evidence of his qualification as may be deemed necessary. Documentation which may be required if financial soundness, technical competency, and other pertinent qualifications of a bidder, including past performance (experience) with the purchaser. ____:____

A. 14 WARRANTY:
Bidder shall warrant all services, materials, and equipment for a period of one year from date of installation completion. ____:____

YES:NO

Under this warranty manufactures liability is limited to furnishing purchaser, without cost, parts and labor required replacing defective material or workmanship when there is no indication of misuse, neglect, improper maintenance, accident or overloading of apparatus. Defects shall be reported to seller in writing by the purchaser within the warranty period. Material and labor will be supplied after inspection by any authorized agent of the contractor. ____:____

A. 15 MATERIAL AND WORKMANSHIP:

All material furnished shall be guaranteed to be new and of current manufacture, to meet all requirements of these specifications, and to be in intended use condition at the time of delivery where applicable. ____:____

All workmanship shall be of high quality and accomplished in a professional manner so as to insure a safe and functional apparatus with an aesthetic appearance. ____:____

A. 16 DELIVERY:

Bidders shall bid delivery time based on number of calendar days from date countersigned contract is issued on the apparatus / work. ____:____

A. 17 OSHA, FEDERAL & STATE REGULATIONS:

All equipment shall meet OSHA requirements, Federal Noise Standards and State and Federal laws, and be ADA compliant. ____:____

BID SPECIFICATION
Shade Structure at Gilley Pool

	Yes	No
The City of McMinnville Parks and Recreation Department will receive sealed bids for installation of TWO (2) shade structures at Gilley Pool at the Civic Center. The following specifications describe the minimum requirements for the services and materials.		
STRUCTURE DIMENSIONS		
Arched Cantilever Style		
Entry height of 8 feet		
Width of 20 feet with fabric shade spanning 16 feet		
Footings to be 3.5 feet by 3.5 feet with a depth of 3 feet		

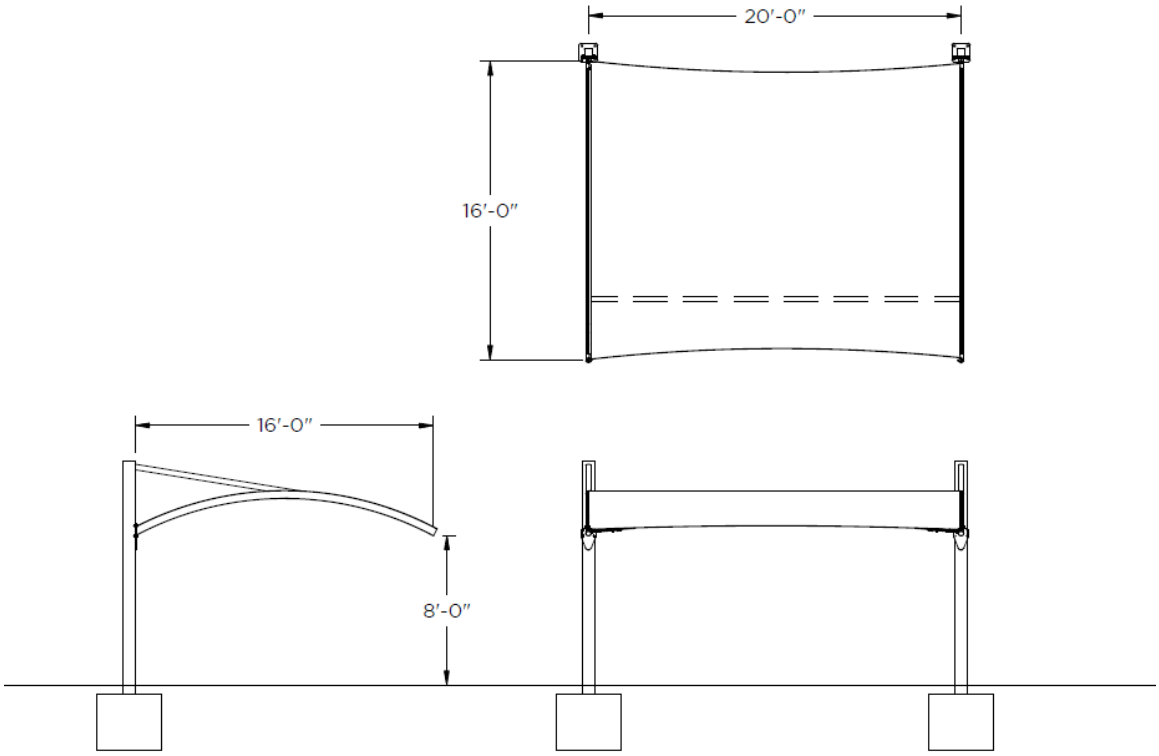

ESTIMATED FOOTINGS: 3.5' X 3.5' X 3'

These drawings are for reference only and should not be used as construction details. They show the general character and rough dimensions of the structural features. Exact spans, fasteners, materials, and foundations can be determined by a licensed professional engineer upon request.

	Yes	No
Color of Shade Fabric to be HUNTER GREEN		
FABRIC SPECIFICATIONS		
Shade fabric is made of UV stabilized cloth manufactured by ALNET or approved equal.		
The high density polyethylene material shall be manufactured with tensioned fabric structures in mind.		
The fabric knit is to be made using monofilament and tape filler which has a weight of 9.38 to 10.32 oz. sq. yd. Material to be Rachel-knitted to ensure material will not unravel if cut.		
Burst strength of 828 lbf (ASTM 3786).		
Cloth meets fire resistance tests as follows:		
Alnet Extra Block: California State Fire Marshall Reg. #F-93501		
Others: NFPA 701-99 (Test Method 2) and ASTM E-84		
THREAD		
Shall be 100% expanded PTFE fiber which carries a 10 year warranty that is high strength and low shrinkage.		
Shall have a wide temperature and humidity range.		
Abrasion resistant and UV radiation immunity.		
Shall be unaffected by non-hydrocarbon based cleaning agents, acid rain, mildew, chlorine, saltwater, and pollution.		
Lockstitch thread – 1200 Denier or equal.		
Chain stitch thread – 2400 Denier or equal.		
STEEL TUBING		
All fabricated steel must be in accordance with approved shop drawings and calculations.		
All steel is cleaned, degreased or etched to ensure proper adhesion of Superdurable powder coat in accordance with manufacturer's specifications.		
All Steel used on this project needs to be new and accompanied by the mill certificates if requested. Structural steel tubing up to 5"-7 gauge shall be galvanized per Allied Steel FLO-COAT specifications. Schedule 40 black pipe fabrications shall be sand-blasted and primed as described below.		
All non-hollow structural shapes comply with ASTM A-36, unless otherwise noted.		
All hollow structural steel shapes shall be cold formed HSS ASTM A-53 grade C, unless otherwise noted.		
Plate products shall comply with ASTM A-36.		
SUPERDURABLE POWDER COATING & PRIMING		
All non-galvanized steel shade to be sand-blasted and primed prior to Superdurable powder coating using reclaimable blast media in a mixture of GL50 & GL80 Steel Grit.		
All non-galvanized steel must be coated with rust inhibiting primer prior to applying the Superdurable powder coat. Primer shall be Marine Grade Cardinal Industrial Finishes Corp. E396–GR1372 epoxy Superdurable powder coating semi-gloss smooth zinc rich primer.		

	Yes	No
Welds shall be primed with rust inhibiting primer prior to applying the Superdurable powder coat. Primer shall be Marine Grade Cardinal Industrial Finishes Corp E396-GR1372 epoxy Superdurable powder coating semi-gloss smooth zinc rich primer.		
All steel parts shall be coated for rust protection and finished with a minimum 3.5 mil thick UV-inhibited weather resistant Superdurable powder coating.		
Powder used in the Superdurable powder coat process shall have the following characteristics:		
WELDING		
All shop welds shall be executed in accordance with the latest edition of the American Welding Society Specifications.		
Welding procedures shall comply in accordance with the AWS D1.1-AWS Structural Welding Code-Steel.		
All welds to be performed by a certified welder. All welds shall be continuous where length is not given, unless otherwise shown or noted on drawings.		
All welds shall develop the full strength of the weaker member. All welds shall be made using E70xx.035 wire.		
Shop connections shall be welded unless noted otherwise. Field connections shall be indicated on the drawings. Field welded connections are not acceptable.		
All fillet welds shall be a minimum of ¼" unless otherwise noted.		
All steel shall be welded shut at terminations to prevent internal leakage.		
Internal weld sleeving is not acceptable.		
On-site welding of any component is not acceptable.		
SEWING		
On-site sewing of a fabric will not be accepted.		
All corners shall be reinforced with extra non-tear cloth and strap to distribute the load.		
The perimeters that contain the cables shall be double lock stitched.		
INSTALLATION HARDWARE		
Bolt and fastening hardware shall be determined based on calculated engineering loads.		
All bolts shall comply with SAE-J429 (Grade 8) or ASTM A325 (Grade BD). All nuts shall comply with ASTM F-594, alloy Group 1 or 2.		
Upon request, Stainless Steel hardware shall comply with ASTM A-304.		
1/4" galvanized wire rope shall be 7x19 strand with a breaking strength of 7,000 lbs. for shades generally under 575 sq. ft. unless requested larger by the customer. For shades over 575 sq. ft., cable shall be 5/16" with a breaking strength of 9,800 lbs. Upon request, 1/4" Stainless Steel wire rope shall be 7x19 strand with a breaking strength of 6,400 lbs. 5/16" Stainless Steel wire rope shall be 7/19 strand with a breaking strength of 9,000 lbs.		
All fittings required for proper securing of the cable are hot dipped galvanized.		
CONCRETE		
Refer to diagram above. No surface mounting		

	Yes	No
• Concrete work shall be executed in accordance with the latest edition of American Concrete Building Code ACI 318 unless specified by the governing municipality.		
• Concrete specifications shall comply in accordance with, and detailed as per plans as follows:		
1. 28 Days Strength F'c = 2500 psi		
2. Aggregate: HR		
3. Slump: 3-5		
4. Portland Cement shall conform to C-150		
5. Aggregate shall conform to ASTM C-33 • All reinforcement shall conform to ASTM A-615 grade 60. • Reinforcing steel shall be detailed, fabricated and placed in accordance with the latest ACI Detailing Manual and manual of Standard Practice. • Whenever daily ambient temperatures are below 80˚ Fahrenheit, the contractor may have mix accelerators and hot water added at the batch plant (see table). The contractor shall not pour any concrete when daily ambient temperature is below 55˚ Fahrenheit.		

TEMPERATE

Temperature Range	% Accelerator	Type Accelerator
75-80˚	1%	High Early (non calcium)
70-75˚	2%	High Early (non calcium)
Below 70˚	3%	High Early (non calcium)

FOOTINGS		
All anchor bolts set in new concrete shall be ASTM A-307, or ASTM F-1554 if specified by engineer.		
All anchor bolts shall be zinc plated unless specified otherwise.		
Footing shall be placed in accordance with and conform to engineered specifications and drawings.		
Footing will be core drilled through existing concrete slab		

	Yes	No
General Specifications "Iran Divestment Act" T.C.A. 12-12-101 et. Seq. – By submission of this bid each Bidder and each person signing on behalf of any Bidder certifies, and in the case of a joint bid each party thereto certifies as to its own organization, under penalty of perjury, that to the best of its knowledge and belief that each bidder is not on the list created pursuant to T.C.A. 12-12-106		

C 1. TIMELINE

	ACTION	DATE
1.	**RFB Issued and advertised**	**April 7, 2017**
3.	**Inquiry Deadline**	**April 17, 2017**
4.	**Proposals due/Bid Opening**	**April 19, 2017 @ 2pm.**
6.	**Committee Approval**	**April 22, 2017**
7.	**Board Approval**	**May 9, 2017**
8.	**Award Contract**	**May 10, 2017**

Proposal Form
City of McMinnville
Parks and Recreation Department
Shade Structure at Gilley Pool

Date_____

Bid Submitted By:

Company _____

Address _____

Phone _____

Contact Person _____

Fax Number _____

Email _____

Warranty Information: _____

_____

_____

Delivery Information: (State number of calendar days for delivery after the date purchase order is received.) _____ calendar days.

Please bid price for purchase and install of ONE (1) Arching Cantilever Shade Structure. If budget permits we will purchase TWO (2)

1. One Shade Structure at Gilley Pool_ $_____

2. Two Shade Structures at Gilley Pool $_____

Signature:_____

_____

(Job Title)